We also stock

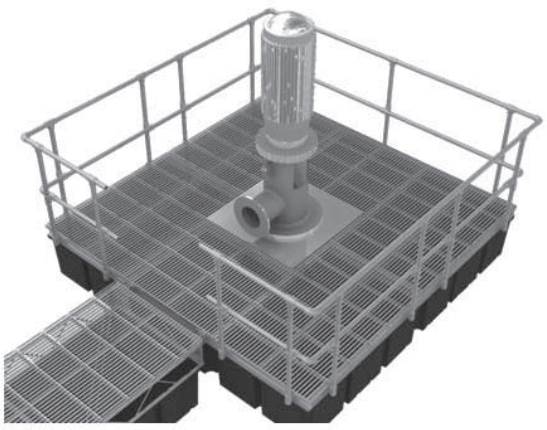

PUMP PLATFORMS

NEW!

ADJUSTABLE PILE GUIDES

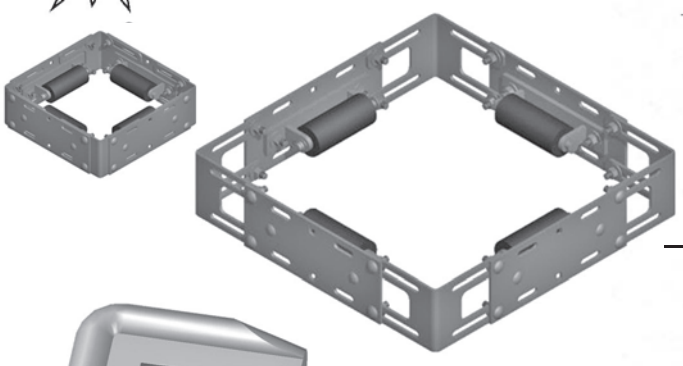

CORNER BUMPERS

View our complete product line on our website...

SQUARE INTERNAL PILE GUIDES

For replacement roller assembly or parts see page 19.

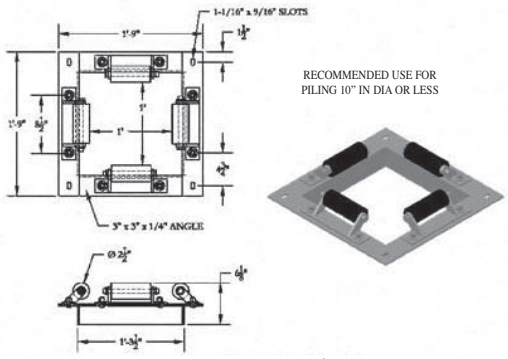

HP-12IN Ship# 42 $150.74

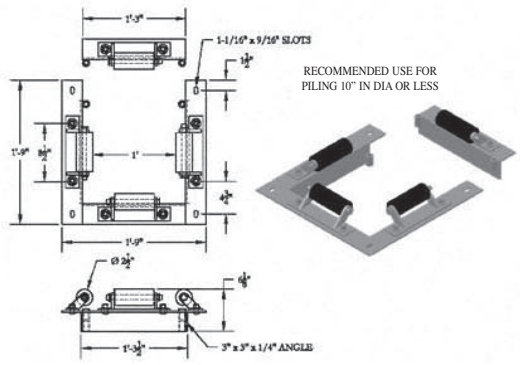

HP-12INR Ship# 43 $154.62

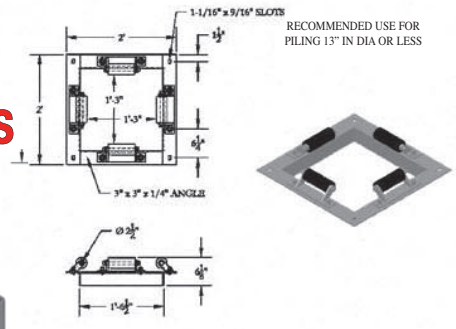

HP-15IN Ship# 53 $165.68

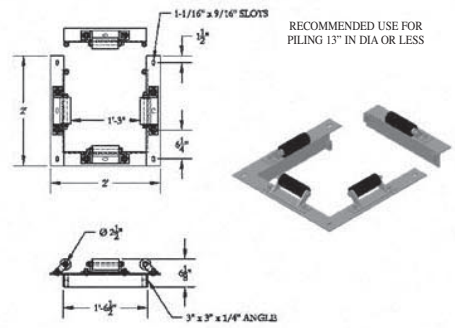

HP-15INR Ship# 54 $170.52

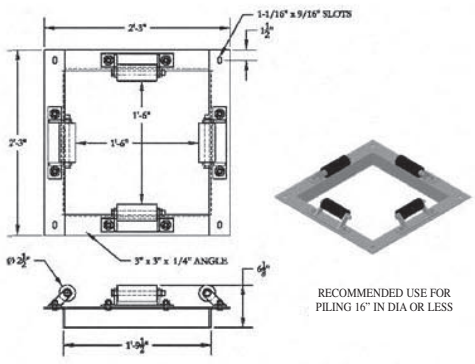

HP-18IN Ship# 58 $174.47

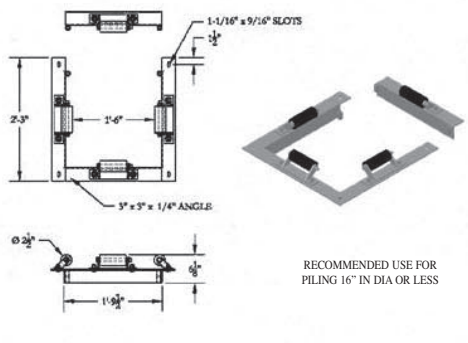

HP-18INR Ship# 59 $178.84

PILE GUIDES

WWW.MERCOMARINE.COM **1-304-737-3006**

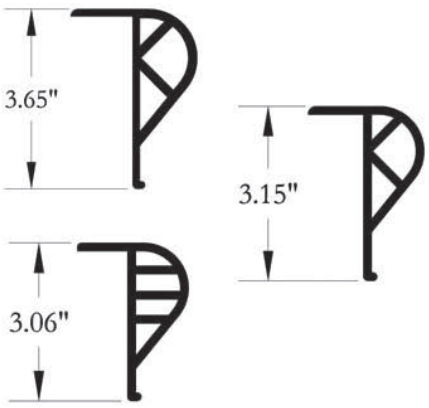

RUBRAIL

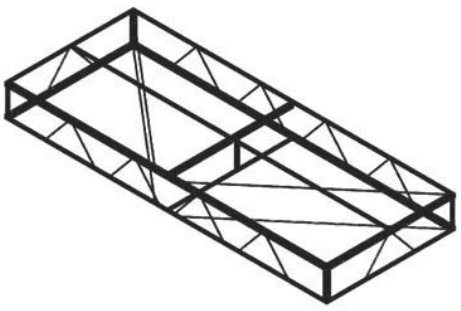

TRUSS FRAMES

MERCO MARINE™

HOOP PILE HOLDERS

Our convertible Hoop Pile Holders have 3 basic pieces, a dock bracket, a hoop and a roller assembly. This allows you to have a hoop pile holder the way you want it, whether it be a permanent hoop, a removable hoop or a hoop with a roller. All Hoops on this page are 1-1/2" schedule 40 pipe. The dock brackets are 4" x 6" x 1/4" angle. The Roller assembly features a 6" solid poly roller and can be bolted to the deck plate or directly to the dock. All parts are hot dipped galvanized. Add a UHMW Roller to any assembly as shown at the bottom of page 19.

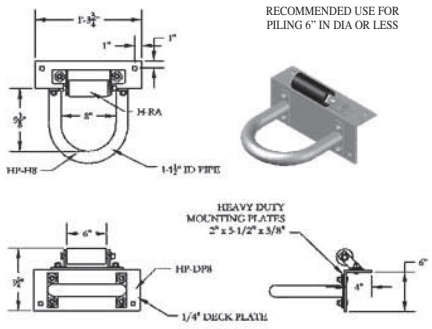

	Ship#	Price		Ship#	Price
HP-H8 8" Hoop	8#	$35.93	**H-RA** Roller Assembly	5#	$25.67
HP-DP8 Deck Plate	13#	$33.28	**HP-HBR** Assembly Complete	26#	$94.88

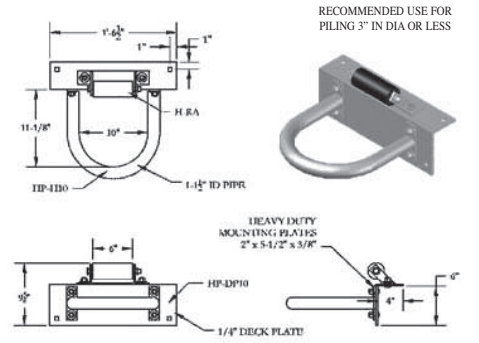

	Ship#	Price		Ship#	Price
HP-H10 10" Hoop	9#	$38.55	**H-RA** Roller Assembly	5#	$25.67
HP-DP10 Deck Plate	13#	$35.31	**HP-H10R** Assembly Complete	27#	$99.53

PILE GUIDES

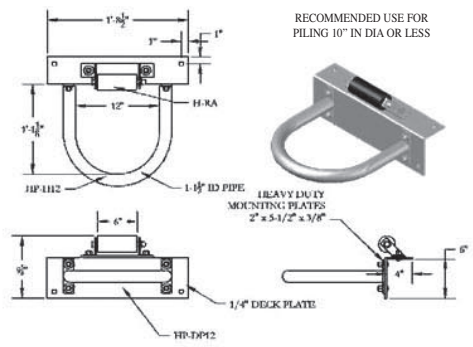

	Ship#	Price		Ship#	Price
HP-H12 12" Hoop	11#	$43.42	**H-RA** Roller Assembly	5#	$25.67
HP-DP12 Deck Plate	16#	$37.34	**HP-H12R** Assembly Complete	32#	$106.43

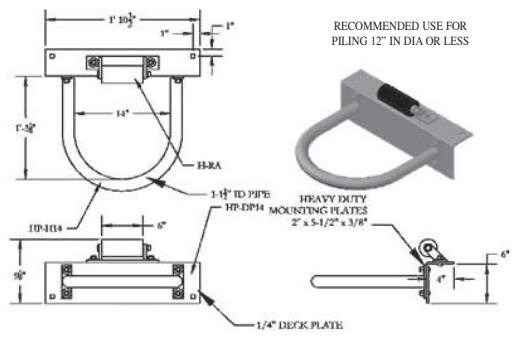

	Ship#	Price		Ship#	Price
HP-H14 14" Hoop	12#	$47.34	**H-RA** Roller Assembly	5#	$25.67
HP-DP14 Deck Plate	16#	$38.30	**HP-H14R** Assembly Complete	33#	$111.31

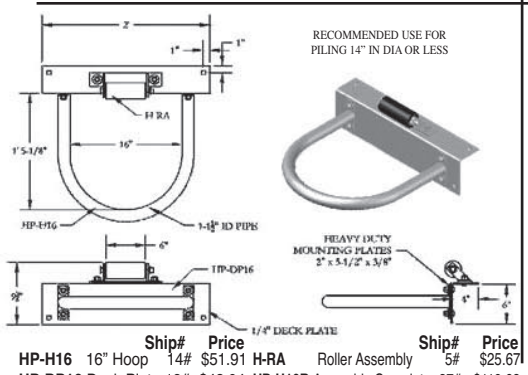

	Ship#	Price		Ship#	Price
HP-H16 16" Hoop	14#	$51.91	**H-RA** Roller Assembly	5#	$25.67
HP-DP16 Deck Plate	18#	$42.04	**HP-H16R** Assembly Complete	37#	$119.62

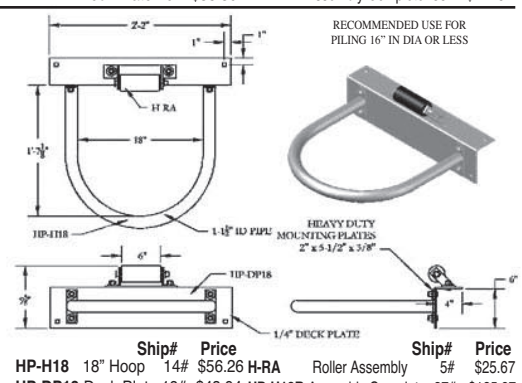

	Ship#	Price		Ship#	Price
HP-H18 18" Hoop	14#	$56.26	**H-RA** Roller Assembly	5#	$25.67
HP-DP18 Deck Plate	18#	$43.94	**HP-H18R** Assembly Complete	37#	$125.87

NOT SHOWN - 20" opening **- HP-H20 -** $60.61 / **HP-DP20 -** $45.88 / **HP-H20R -** $132.16